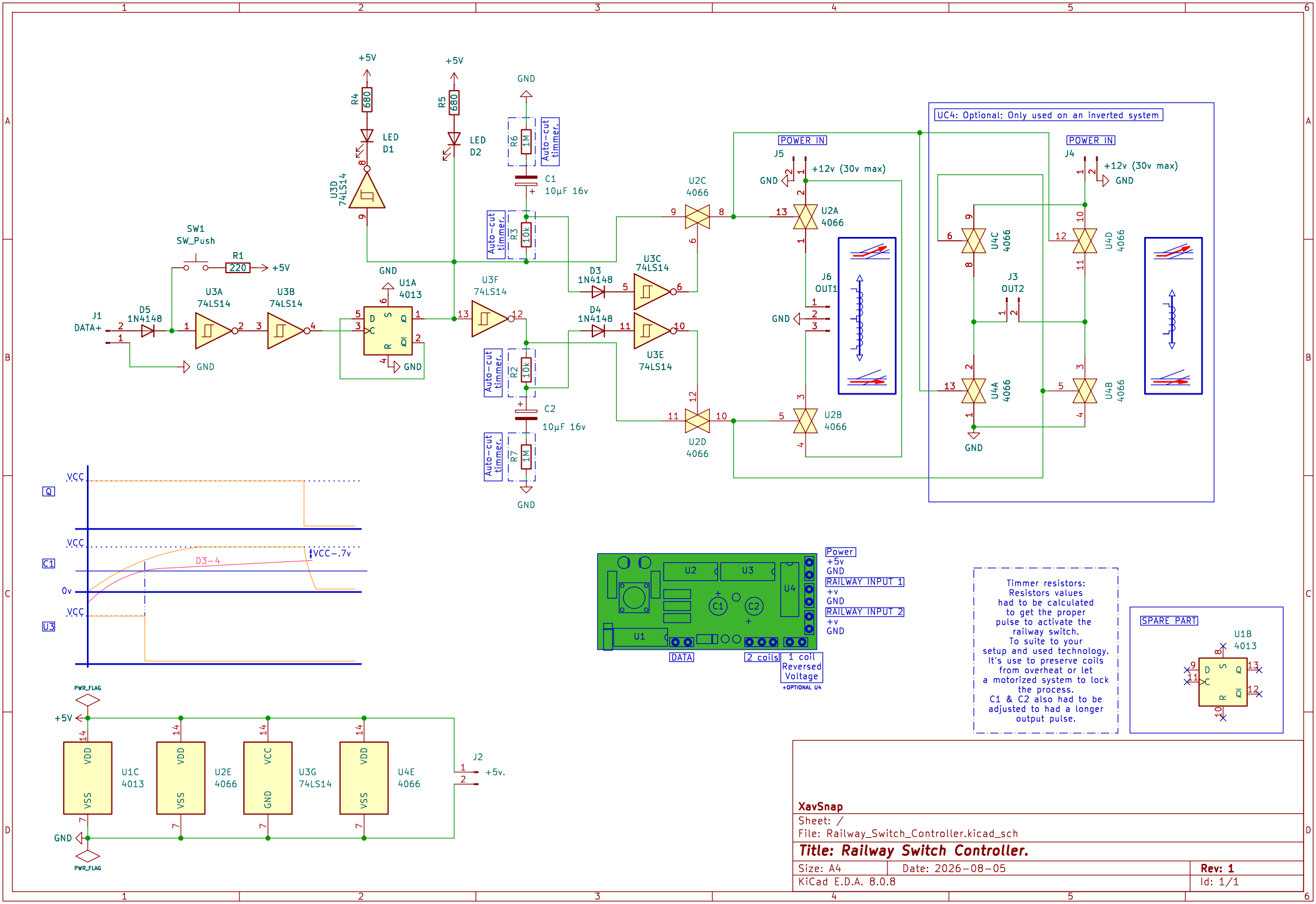

XavSnap

Sheet: /

File: Railway_Switch_Controller.kicad_sch

Title: Railway Switch Controller.

Size: A4	Date: 2026-08-05	**Rev: 1**
KiCad E.D.A. 8.0.8		Id: 1/1